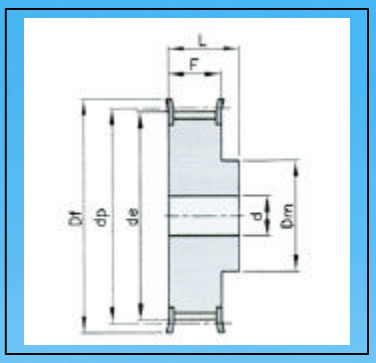

L 050	Poleas dentadas estandar – ISO 5294												
PASSO 1/2”	Código	Tipo	Material	Diente	dp	de	Df	Dm	F	L	d	nº flangia	Kg.
14005010	10 L 050	2F	St	10	30,32	29,56	36	20	19,0	28	8	300	0,11
14005011	11 L050	2F	St	11	33,35	32,59	38	24	19,0	30	8	301	0,14
14005012	12 L 050	2F	St	12	36,38	35,62	42	24	19,0	30	8	302	0,17
14005013	13 L 050	2F	St	13	39,41	38,65	44	28	19,0	30	8	303	0,21
14005014	14 L 050	2F	St	14	42,44	41,68	48	28	19,0	30	8	304	0,24
14005015	15 L 050	2F	St	15	45,48	44,72	51	34	19,0	30	8	305	0,29
14005016	16 L 050	2F	St	16	48,51	47,75	54	36	19,0	32	8	306	0,33
14005017	17 L 050	2F	St	17	51,54	50,78	57	36	19,0	32	10	307	0,38
14005018	18 L 050	2F	St	18	54,57	53,81	60	40	19,0	32	10	308	0,44
14005019	19 L 050	2F	St	19	57,61	56,84	63	40	19,0	32	10	309	0,47
14005020	20 L 050	2F	St	20	60,64	59,88	66	40	19,0	32	10	310	0,51
14005021	21 L 050	2F	St	21	63,67	62,91	71	45	19,0	32	10	311	0,60
14005022	22 L 050	2F	St	22	66,70	65,94	75	45	19,0	32	10	312	0,64
14005023	23 L 050	2F	St	23	69,73	68,97	79	55	19,0	32	10	313	0,78
14005024	24 L 050	2F	St	24	72,77	72,00	79	55	19,0	32	10	313	0,81
14005025	25 L 050	2F	st	25	75,80	75,04	83	58	19,0	32	10	314	0,89
14005026	26 L 050	2F	st	26	78,83	78,07	87	58	19,0	32	12	315	0,94
14005027	27 L 050	2F	st	27	81,86	81,10	87	58	19,0	32	12	315	0,99
14005028	28 L 050	2F	st	28	84,89	84,13	91	58	19,0	32	12	316	1,04
14005030	30 L 050	2F	st	30	90,96	90,20	97	70	19,0	32	12	318	1,17
14005032	32 L 050	2F	st	32	97,03	96,26	103	70	19,0	32	12	320	1,41
14005033	33 L 050	2F	st	33	100,05	99,29	106	70	19,0	32	12	321	1,49
14005034	34 L 050	2F	st	34	103,08	102,32	111	70	19,0	32	12	322	1,57
14005035	35 L 050	2F	st	35	106,12	105,35	111	70	19,0	32	12	322	1,62
14005036	36 L 050	2F	St	36	109,15	108,39	115	70	19,0	32	12	323	1,70
14005040	40 L 050	2F	St	40	121,29	120,51	127	70	19,0	32	12	327	2,03
14005042	42 L 050	2F	st	42	127,34	126,58	135	70	19,0	32	12	328	2,21
14005044	44 L 050	2F	St	44	133,40	132,64	140	70	19,0	32	12	330	2,38
14005045	45 L 050	2F	st	45	136,44	135,67	143	70	19,0	32	12	331	2,48
14005048	48 L 050	2F	st	48	145,53	144,77	152	70	19,0	32	12	334	2,78